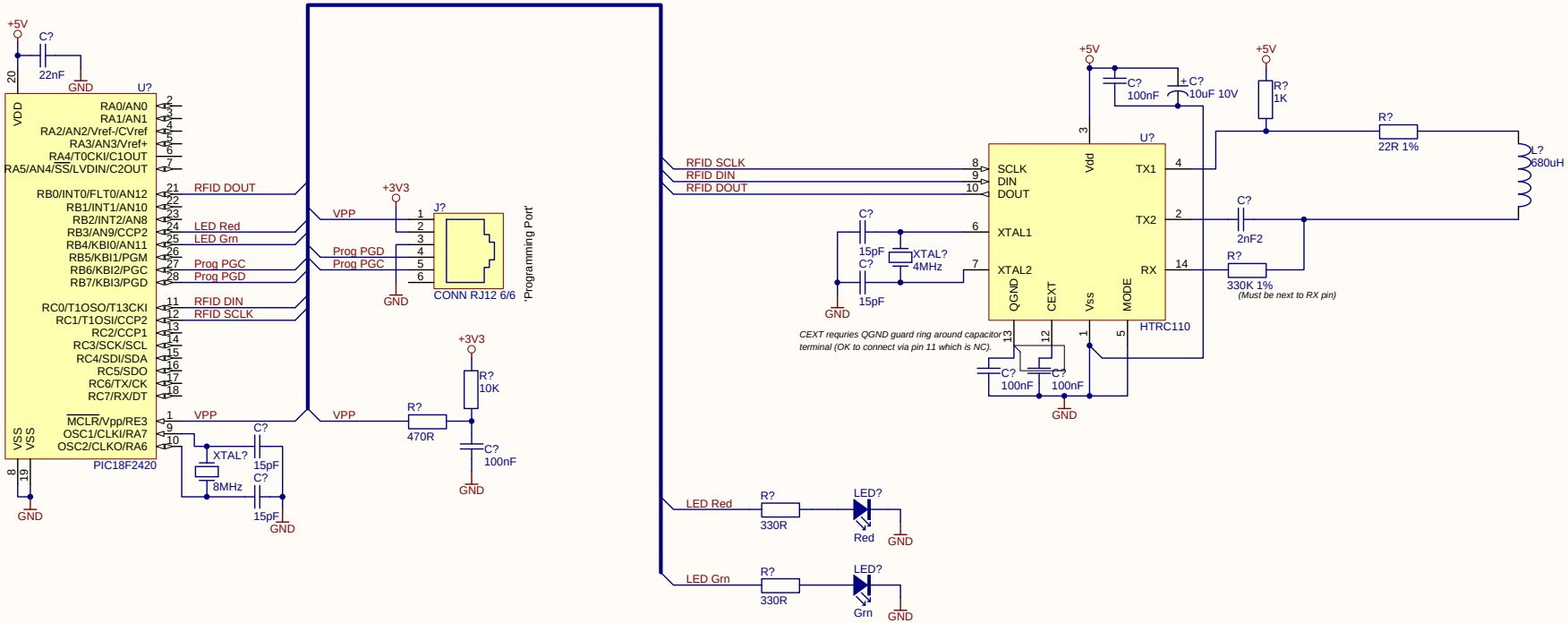

Rev.	Notes
1.00	Original release

Project:
HTRC110 EM4102 125kHz RFID Reader Driver

Title:
HTRC110 RFID Reader Driver Example Project Circuit

Drawing Number:	Rev:	Sheet:
4934-001	1.00	1 of 1

IMPORTANT: THIS DESIGN IS COPYRIGHT OF EMBEDDED-CODE.COM AND IS SUBJECT TO A LICENCE AGREEMENT. ALL RIGHTS RESERVED. UNAUTHORISED USE, REPRODUCTION OR DISTRIBUTION OF THIS DESIGN MAY LEAD TO PROSECUTION. ENQUIRIES TO INFO@EMBEDDED-CODE.COM

embedded-code.com